PART NUMBER SEN-111-08080054L34

CONNECTOR

DESCRIPTION

- EIGHT CONDUCTOR MODULAR PLUG
- FOR CONDUCTORS WITH AN O.D. OF .042"
- USES .012 CONTACT
- PRODUCT REQUIRES CONDUCTIVE LOAD BAR
- FOR CAT 6 PATCH CORD APPLICATIONS
- FOR SOLID OR STRANDED WIRE APPLICATIONS

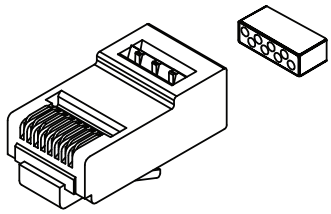

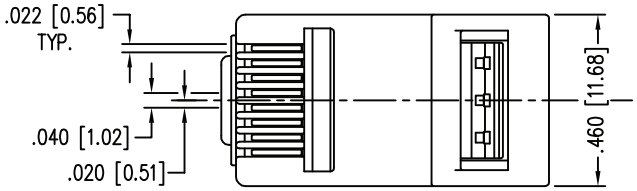

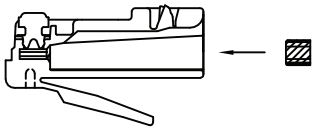

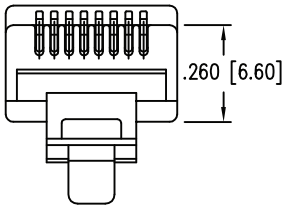

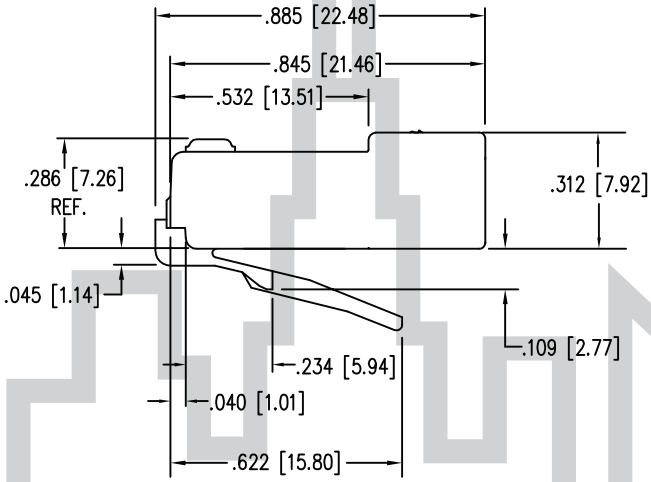

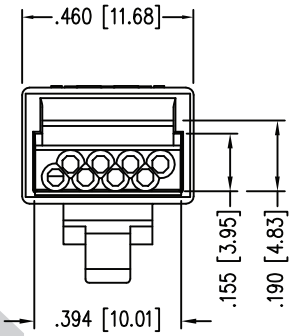

"PATENTED"

SPECIFICATIONS

PERFORMANCE	MEETS OR EXCEEDS CATEGORY 6 ANSI/EIA 568 - C.2 PERFORMANCE TUNED TO CABLES MEETING CATEGORY 6 SPECIFICATIONS
CONTACT MATERIAL	PHOSPHOR BRONZE .012 THK
CONTACT PLATING	50 MICRO INCH SELECTIVE 24 CARAT HARD GOLD IN CONTACT AREA OVER 100 MICRO INCH MINIMUM NICKEL PLATE. PER CURRENT SELECTIVE GOLD PLATING REQUIREMENTS. OTHER PLAYTING OPTIIONS AVAILABLE.
PLUG MATERIAL	POLYCARBONATE
PLUG TOLERANCES/DIMS	COMPLIES WITH ANSI/TIA-1096-A REQUIREMENTS
U.L. RECOGNIZED	FILE #E188111
OPERATION TEMERATURE	-40 ^{o} TO +85 ^{o} C
FLAME AUTO EXTINGUISH	94-VO
INSERTION/EXTRACTION	1000 CYCLES
CONTACT RESISTANCE	10 MILLIOHMS MAX.
CURRENT VOLTAGE	30 VAC/42 VDC AT 1.5 AMPS
RoHS COMPLIANT	*FORMER COMPLIANCE, FFC PART 68.500

 © Copyright 2018 Windy City Wire, Inc. | All rights reserved.